1853104
Emissary Media Storage

Parts and Hardware List

A.	Top Assembly	1 pc
B.	Side Panels	2 pcs
C.	Bottom Panel	1 pc
D.	Feet	4 pcs
E.	Back Panel	1 pc
F.	Doors	2 pcs
G.	Adjustable Shelf Panels	4 pcs
H.	Connecting Bolts	4 pcs
I.	Eccentric Cams	4 pcs
J.	Allen Head Wrench	1 pc
K.	Plastic Caps	4 pcs
L.	Confirmat Screws	4 pcs
M.	Phillips Pan Head Wood Screws	16 pcs
N.	Phillips Head Wood Screws	8 pcs
O.	Phillips Head Screwdriver	1 pc
P.	Shelf Support Pins	16 pcs

* Please make sure that you have all the parts and hardware indicated above before you begin assembly of this item.
* This item should be assembled on a soft surface to prevent scratching the finish during assembly.
* This item may require periodic tightening.

1853104
Emissary Media Storage

Hardware Illustrations

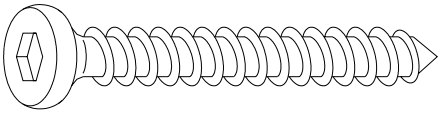

L. Confirmat Screw

M. Phillips Pan Head Wood Screw

N. Phillips Head Wood Screw

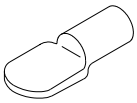

P. Shelf Support Pin

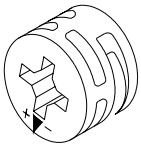

I. Eccentric Cam

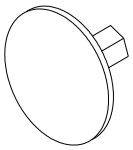

K. Plastic Cap

H. Connecting Bolt

1853104
Emissary Media Storage

Attach Feet, Top and Bottom Panels

Parts required

A.	Top Assembly	1 pc	I.	Eccentric Cams	4 pcs
B.	Side Panels	2 pcs	J.	Allen Head Wrench	1 pc
C.	Bottom Panel	1 pc	K.	Plastic Caps	4 pcs
D.	Feet	4 pcs	L.	Confirmat Screws	4 pcs
H.	Connecting Bolts	4 pcs			

1. **Attach Bottom Panel (C)** Align the pre-drilled holes on the bottom of the Side Panels (B) with the exposed dowels on the Bottom Panel (C). Ensure that the rows of pre-drilled holes on the side surface of the Side Panels face inward and the notched edges face the back. Secure with Confirmat Screws (L) using the Allen Head Wrench (J). Do not fully tighten at this point.
2. **Attach Feet (D)** Insert the exposed threads of the Feet (D) into the holes on the metal plates on the bottom of the Bottom Panel (C). Turn in a clockwise direction.
3. **Attach Top Assembly (A)** Screw the Connecting Bolts (H) into the pre-threaded inserts in the Top Assembly (A). Insert the Eccentric Cams (I) into the two bigger pre-drilled holes on the side surface of one of the Side Panels (B). Make sure the "X" is facing out and the arrow points toward the pre-drilled holes at the edge of the Side Panel (B). Repeat to insert the remaining Eccentric Cams (I) into the other Side Panel (B). Align the pre-drilled holes on the edge of the Side Panels (B) over the Connecting Bolts (H). Secure in place by turning the Eccentric Cams (I) in a clockwise direction using the Allen Head Wrench (J). Cover the Eccentric Cams (I) with Plastic Caps (K). Now tighten all the Confirmat Screws (L). See illustration #1.

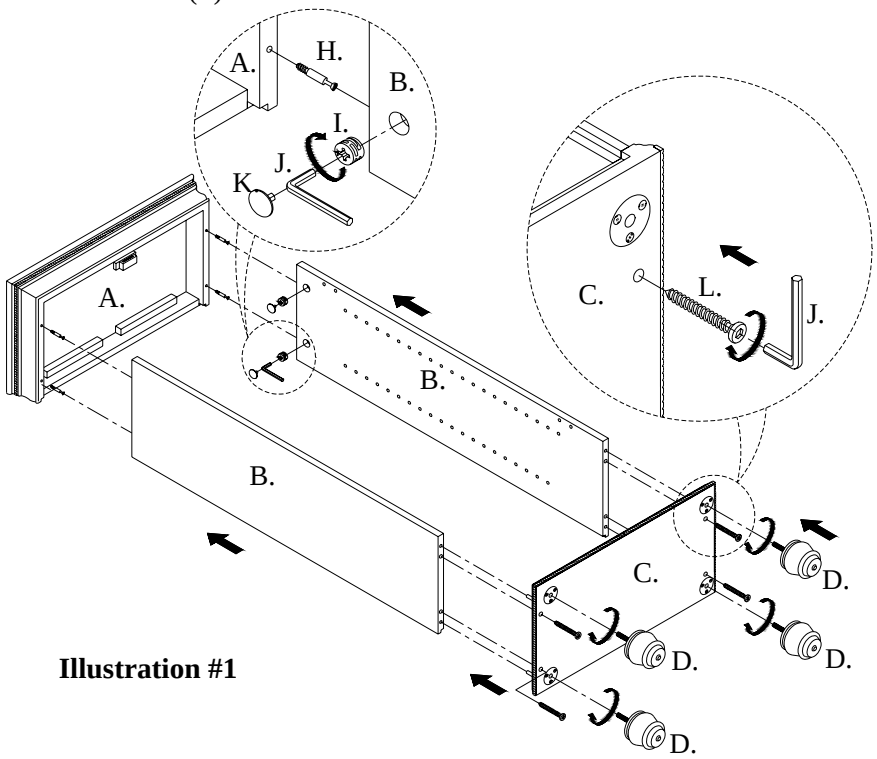

Illustration #1

1853104
Emissary Media Storage

Attach Back Panel

Parts required

E.	Back Panels	1 pc	O.	Phillips Head Screwdriver	1 pc
M.	Phillips Pan Head Wood Screws	16 pcs			

4. **Attach Back Panel (E)** Turn the unit upright. Place the Back Panel (E) into the notches of the Side Panels (B), Top Assembly (A) and Bottom Panel (C). Secure in place with the Phillips Pan Head Wood Screws (M) using the Phillips Head Screwdriver (O). See illustration #2.

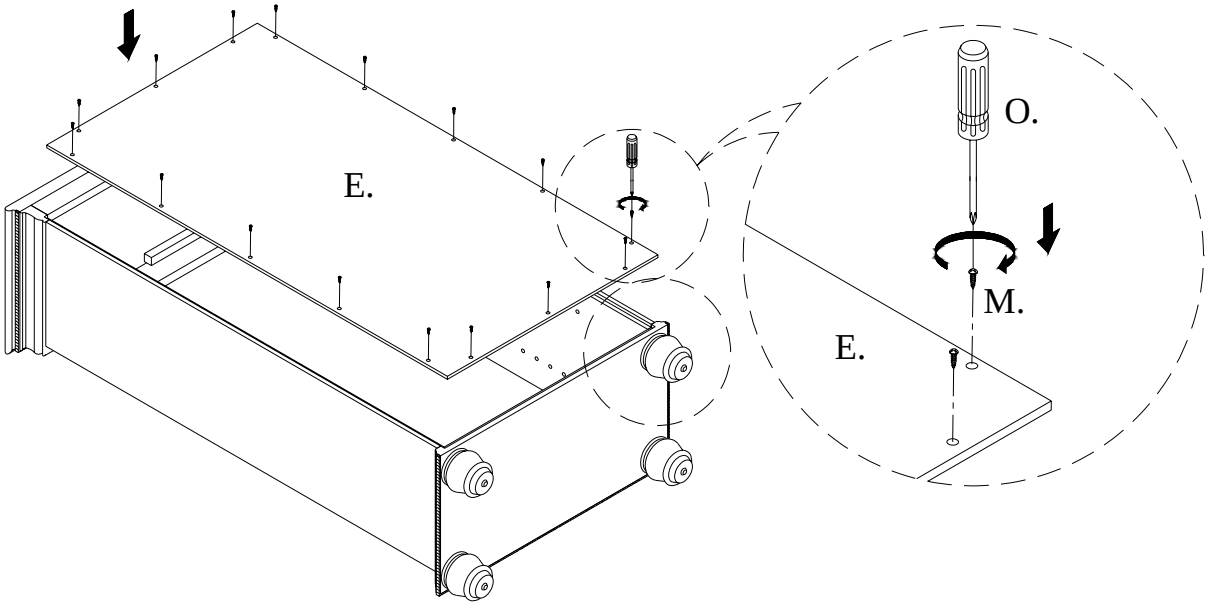

Illustration #2

1853104
Emissary Media Storage

Attach Doors and Shelf Panels

Parts required

F.	Doors	2 pcs	O.	Phillips Head Screwdriver	1 pc
G.	Adjustable Shelf Panels	4 pcs	P.	Shelf Support Pins	16 pcs
N.	Phillips Head Wood Screw	8 pcs			

5. **Attach Doors (F)** Align the holes of the door hinges with the pre-drilled holes near the edge of the Side Panels (B). Secure with Phillips Head Wood Screws (N) using the Phillips Head Screwdriver (O).
6. **Attach Adjustable Shelf Panels (G)** Insert the Shelf Support Pins (P) into the pre-drilled holes on the Side Panels (B) at the desired height. Place the Adjustable Shelf Panels (G) over the Shelf Support Pins (P). See illustration #3.

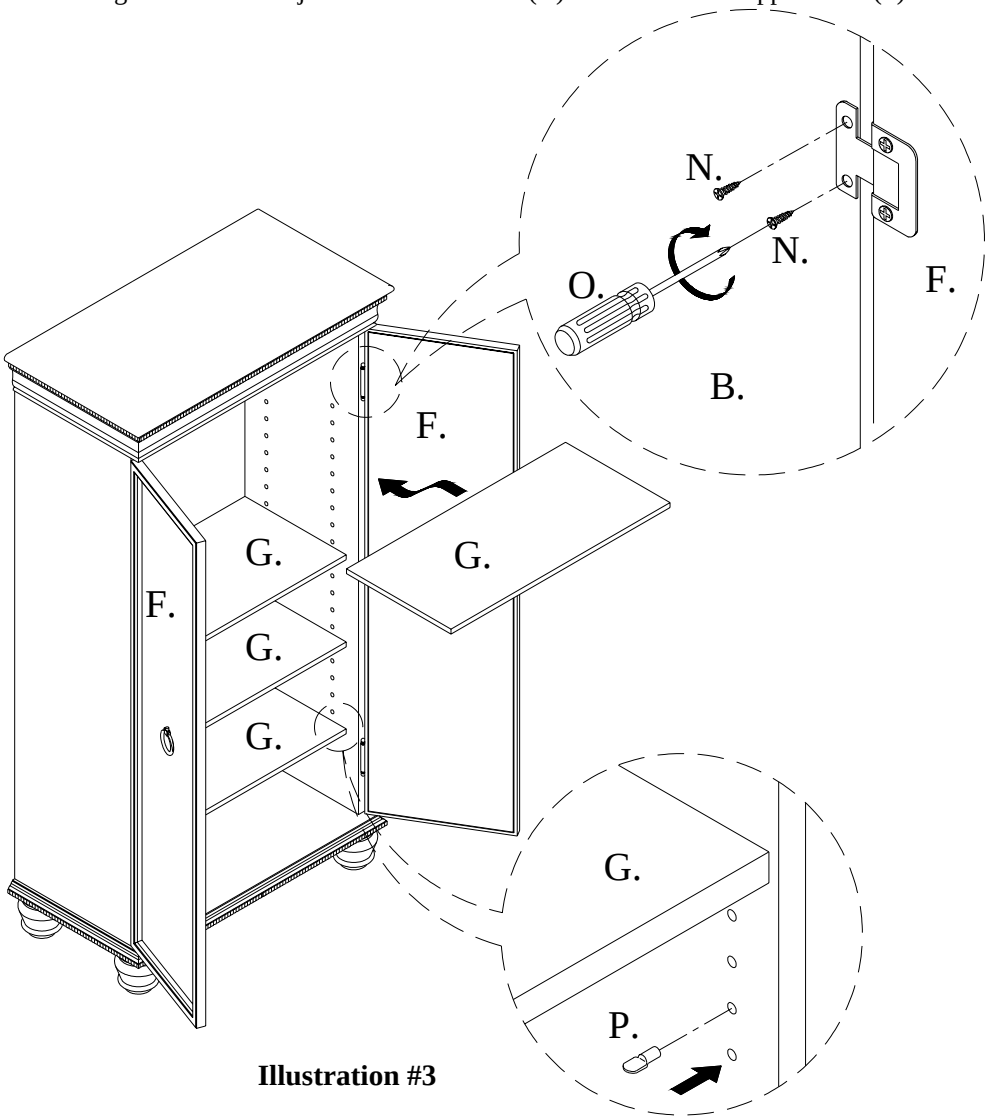

Illustration #3

1853104
Emissary Media Storage